BEST AVAILABLE COPY

July 27, 1926. 1,593,799

A. KADDATZ

COMBINED ADDING AND PRINTING MACHINE

Filed May 5, 1925 4 Sheets-Sheet 1

Fig. 1.

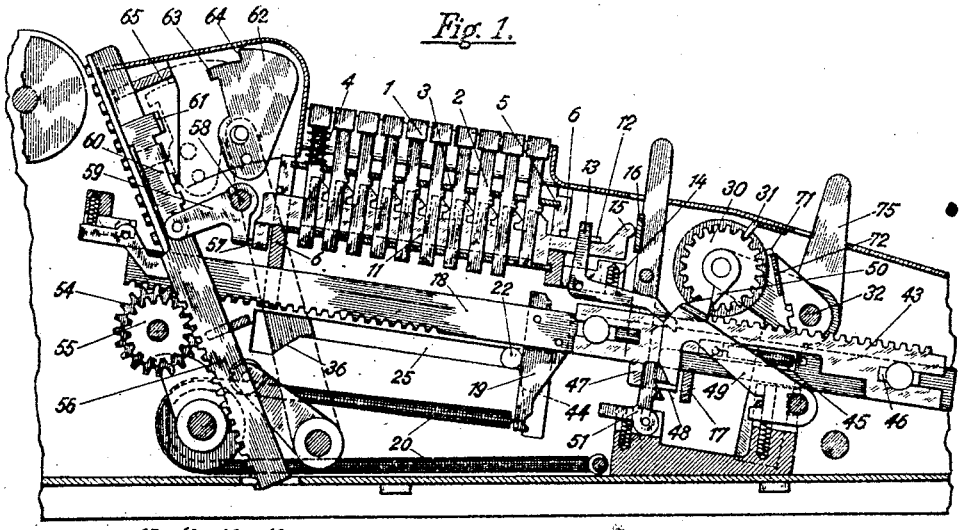

Fig. 2.

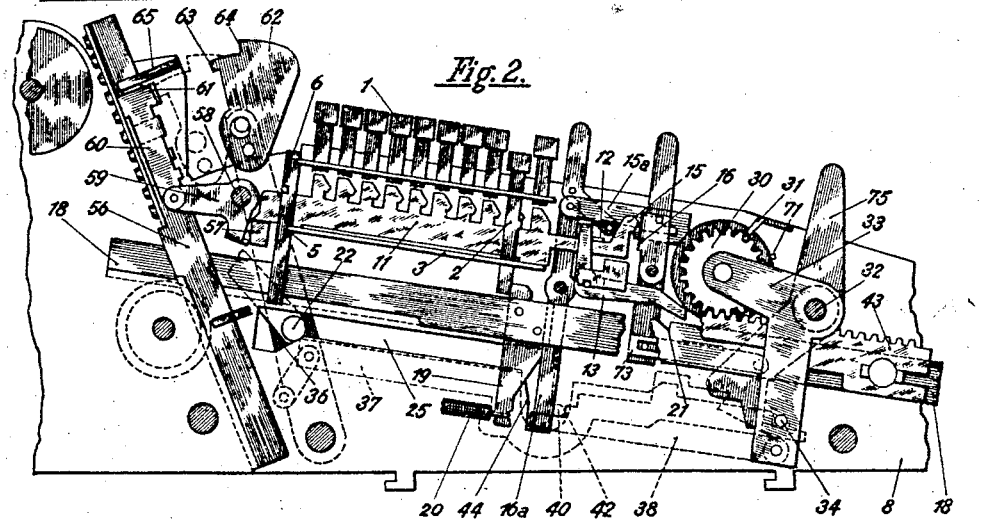

Inventor
Arthur Kaddatz
By B. Singer, Atty.

BEST AVAILABLE COPY

July 27, 1926. 1,593,799

A. KADDATZ

COMBINED ADDING AND PRINTING MACHINE

Filed May 5, 1925 4 Sheets-Sheet 2

Fig. 3.

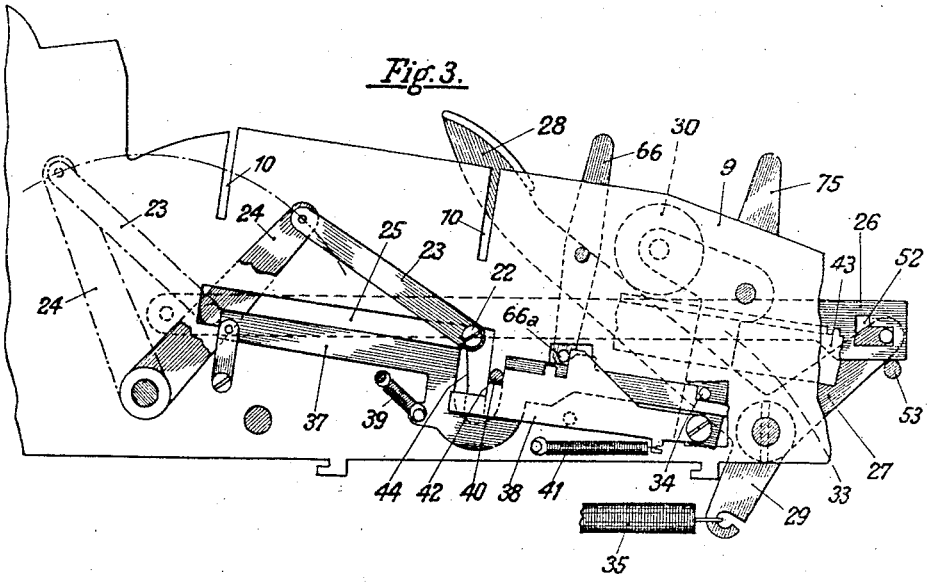


Fig. 4.

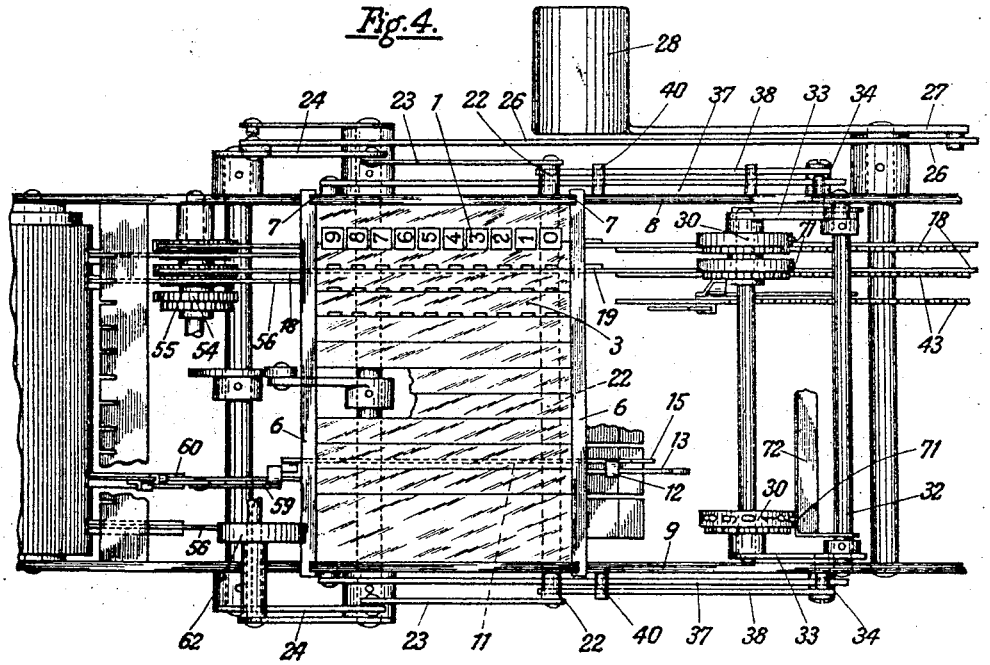


Inventor:
Arthur Kaddatz
By B. Singer Atty

BEST AVAILABLE COPY

July 27, 1926. 1,593,799

A. KADDATZ

COMBINED ADDING AND PRINTING MACHINE

Filed May 5, 1925 4 Sheets-Sheet 3

Fig. 5.

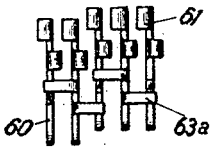


Fig. 6.

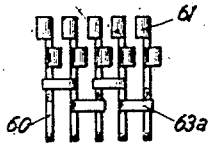


Fig. 7.

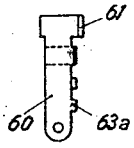


Fig. 8.

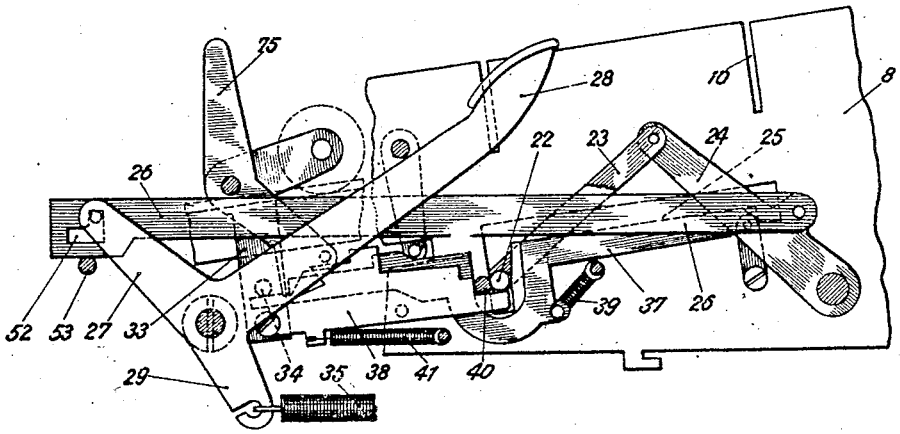


Inventor:
Arthur Kaddatz
By B. Singer, Atty.

BEST AVAILABLE COPY

July 27, 1926. 1,593,799

A. KADDATZ

COMBINED ADDING AND PRINTING MACHINE

Filed May 5, 1925 4 Sheets-Sheet 4

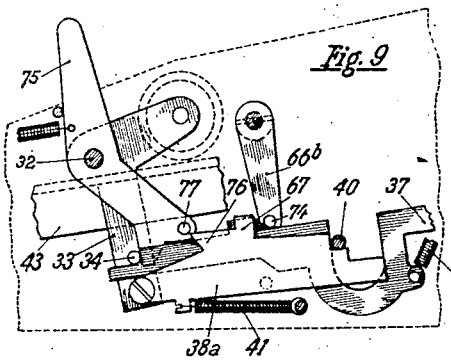


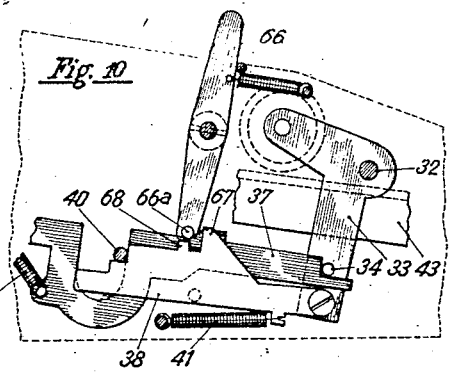


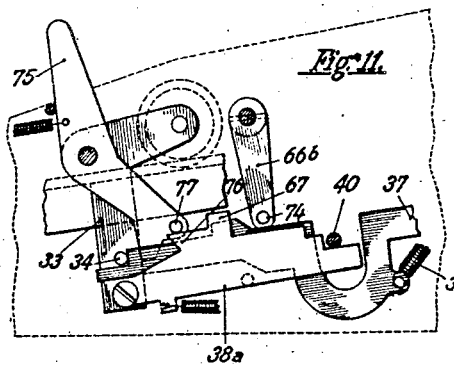


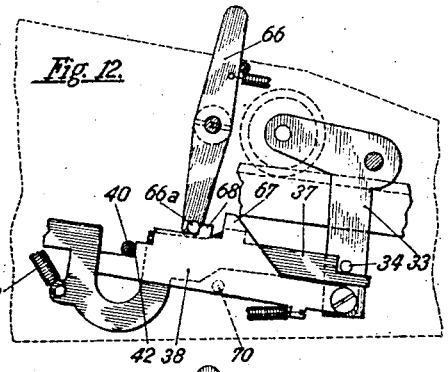


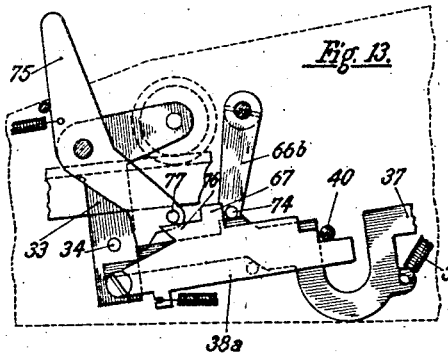


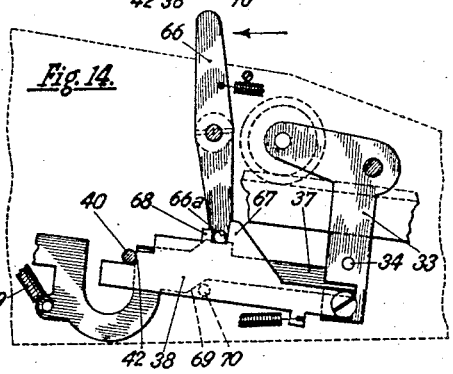


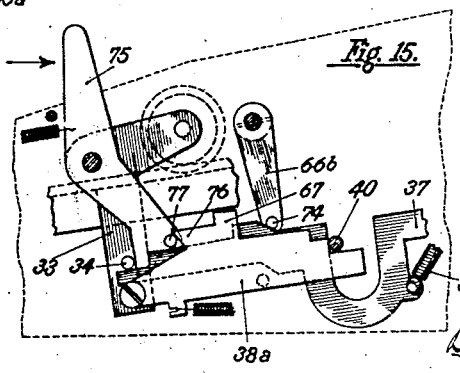


Inventor:
Arthur Kaddatz
By B. Singer, Atty.

BEST AVAILABLE COPY

Patented July 27, 1926. 1,593,799

# UNITED STATES PATENT OFFICE.

ARTHUR KADDATZ, OF BERLIN, GERMANY, ASSIGNOR TO THALESWERK M. B. H., OF RASTATT, BADEN, GERMANY, A GERMAN COMPANY.

## COMBINED ADDING AND PRINTING MACHINE.

Application filed May 5, 1925, Serial No. 28,110, and in Germany November 29, 1923.

This invention relates to that type of adding and printing machines, in which the figure keys themselves constitute stops co-operating with elements each of which is only provided with a single stop or projection.

The essential feature of the invention consists in the fact that the rows of keys are located in the same plane as the type bars or type carriers which are placed side by side at the normal distance apart for printing, and that the keys are arranged at the same distance behind one another as that separating the type on the type bars from one another.

By reason of the smallness of the heads of the keys over the whole keyboard, owing to the foregoing construction, a special key operating device or key rod may be provided by means of which the individual keys are actuated.

Other features of the invention will be brought out clearly in relation to the description of the drawings, and will be defined more particularly in the appended claims.

The object of the invention is to produce a small handy machine which, while being of light weight, necessitating only a small expenditure of materials and consequently being cheap, gives the same results as the well known forms of adding machines.

The invention is illustrated by way of example in the accompanying drawings, in which:—

Fig. 1 is a sectional side elevation with the parts in the out of use or inoperative position.

Fig. 2 is a similar view with some of the parts in the operative position.

Fig. 3 shows the operating and driving mechanism.

Fig. 4 is a top plan of the working parts of the machine.

Figs. 5, 6 and 7 are details hereinafter referred to.

Fig. 8 shows the operating and driving mechanism from the opposite side to Fig. 3.

Figs. 9 to 15 show various operative positions, seen from the right and the left.

The keys 1 which are arranged in the manner of a chess board (see Fig. 4) are provided with stems 2 which pass at upper and lower levels through cut away portions of rods 3. 4 is a spring for holding the key in the upper position. The rods 3 are inserted into slots 5 in the transverse struts 6, in such a way that the back of any one of the rods 3 comes against the openings in the neighbouring rod, so that in this way the stems of the keys are guided and held in position. The transverse struts 6 are provided with slots 7 at their ends, by means of which they engage in recesses 10 cut in the side walls 8 and 9, so that in this way the whole of the keyboard can be easily interchanged, whilst at the same time the side walls are given the necessary rigidity.

The locking bars 11 pass through and are guided by cut away portions in the transverse struts 6. These bars hold the keys in the set or depressed positions in the ordinary way.

At their reduced right hand ends, as seen in Fig. 1, they are provided with bent over portions 12 (see Fig. 4). Against this turned over portion 12 is adapted to bear one arm of the locking hook 13, which is shaped as a bell crank lever, the lower arm of which is kept pressed downwards by means of a compression spring 14. In this way the vertical arm is spring pressed towards the right, so that the corresponding locking bar 11 is also always kept pressed towards the right and against the transverse struts 6.

When a key is pressed down, as shown at Fig. 2, a hook on the locking bar takes over the bent over portion of the stem of the key and locks the key down. If another key is set, the key already depressed is released, in a well known manner. 16 is a rocking device against which the prolonged ends 15 of the locking bars are adapted to rest so that by rocking over this device all the keys can be released.

18 are differential bars, one of which is located under each row of keys and guided towards one end by the strut 17 of the framework and towards the other end by the strut 6. The projecting pieces 19 are attached to these bars. The upper or shorter end 19a of a projecting piece is adapted to come against the lower end of the stem of a key when depressed. The bar can follow the pull of a spring 20, which is connected to the lower and longer end of the projecting piece 19. Underneath the locking hook 13, the bar 18 is provided with a notch 21 with which the locking hook 13 is adapted to engage in the position shown at Fig. 1, when none of the keys are depressed.

BEST AVAILABLE COPY



This engagement of the locking hook in the notch causes the differential bar to be held fast. If however, as shown at Fig. 2, a key is set or depressed, then the locking hook is disengaged by means of the locking bar 11 and the turned over portion 12, so that the differential bar 18 can then yield to the pull of the spring. In general, however it is restrained from doing so by the common retaining bail 22. The locking bar 11 after a key has been set comes into a different position to that which it would occupy in the rest position, and this is due to the fact that the hook of the locking bar cannot take so far over the turned over portion on the stem of the key as to allow the locking bar to return to the inoperative or rest position. The locking hook 13 continues raised when the locking bar 11 is in a position between that of rest and the setting of a key.

As has already been stated, those of the differential bars 18 which are in the plane of keys which have been depressed, have a tendency to yield to the pull of the spring, but are in the first instance retained in position by the bail 22, which is carried by means of elbow levers 23, 24 arranged parallel and on both sides, so that the bail slides in slots 25 on the side walls, see Figs. 3 and 8. 26 is a connecting rod, connected at one end to the lever 24 and connected at the other end to an arm 27 of a hand lever 28 which is of T shape towards the lower end. This connecting rod and hand lever prevent the elbow levers collapsing together under normal conditions, but as soon as pressure is put upon the hand lever 28, the bail 22 yields to the pull of the spring and the elbow levers fold together. A tension spring 35 is connected to the second and lower arm 29 of the hand lever, which spring is put into tension when the hand lever is pressed down.

When the bail 22 moves away, the projections 19 on the bars 18 move more or less and come against the stems of the keys moving through a number of units of distance corresponding to the value of the key which is set or depressed. The bail 22 finally comes into its extreme position to the left, as shown at Fig. 2.

During the movement of the bar 18 towards the left, the counter 30 is out of engagement. In this position each of the counter wheels is held from rotation by means of a fixed tooth or projection 31. The counter wheels 30 are located in a frame 33 oscillating about an axle 32. The downwardly extending portion of this frame is provided with a pin 34, one of these being provided at each side of the frame, as in fact most of the elements are duplicated on each side in order to preserve parallelism in action, the parts being provided on both sides of the machine.

The return of the hand lever 28 is caused by the tension spring 35, and during the return the bail 22 passes over an incline 36 on the slot 25 and moves the push bar 37 in the longitudinal direction, this bar striking against the pin 34 and throwing in the counter. The spring 39 moves the bar 37 towards the left (see Figs. 2 and 3) and upwards. The position to the left is governed by the pin 40 fixed to the casing, whilst the pin 34 prevents upward movement.

To the lower extension of the frame 33 is pivoted a bolt 38, which is under the pull of a spring 41, so that it has a springy upward tendency, which tends to hold the counter out of engagement with the differential bars 18, see Fig. 8. When however the bail 22 moves backwards, it pushes the bars 37 towards the right, and these, with their right hand ends strike the pins 34 and throw in the counter, as shown at Figs. 2 and 12, in which position it is secured by the bolt 38 which engages with its projections 42 over the pin 40.

The bail 22 is moved towards the right (see Figs. 1 and 2) through the pull of the spring 35 and comes into contact in succession with the projections 19, thus also moving the differential bars 18 towards the right, so that the toothed rack 43 connected to each of the differential bars moves the counting wheel of the counter 30 through a distance corresponding to the key depressed. As the wheels of the counter, when thrown in, sink down, they are freed from the tooth or projection 31 and can turn without hindrance. As soon as the bail 22 reaches the end of its path or draws near the end, it moves downwards over an incline 44 of the slot 25 and when it comes into the lowermost position it strikes, on the right and on the left, against the bolt 38 and moves it downwards, the result being that the counter is again released and raised by the springs 41, the tooth or projection 31 then again holding it from unrequired motion.

The position shortly before the release of the bolt 38 is shown in Fig. 8.

At the moment when the bail 22 slides down the incline 44 it moves not only in a vertical direction but also in a horizontal direction through a path in the course of which it pushes the lever 16a (Fig. 2) sideways. This lever is connected with the rocking device 16 by means of an adjustable member 15a which can be turned out of the way in case it should be required to repeat a calculation instead of clearing the keyboard.

Each of the differential bars 18 carries the toothed rack 43 movable through the distance of unit value; the toothed rack being pulled towards the right by means of a spring 45 (Fig. 1) against a guide pin.

BEST AVAILABLE COPY



After the bail 22 has allowed the last of the unit values to be transferred to the counter, a projection 47 on the toothed rack 43 strikes the bent over portion 48 on the lever 49. As the bail 22 slides over the incline 44 of the stop 25, the differential bar 18 is moved through a further unit distance, the toothed rack 43 not taking part in this movement, because its projection 47 comes against the turned over portion 48; the spring 45 is however put in tension. On passing from 9 to zero, the projection 50 pushes the lever 49 downwards, in which position it is held by the hook 51. The bent over portion 48 in this way comes out of the reach of the toothed rack 43, and this latter springs towards the right, and as a lever 49 of a counter wheel of lower denomination is released, causes a transfer or carrying over of 10. All the toothed racks 43 which have effected a transfer have moved towards the right, so that their projections 47 have come against the transverse struts 17; moreover all the bars 18 have moved out of their normal position shown in Fig. 1 through one step further towards the right, which has been caused by the additional distance through which the bail 22 has passed, as indicated at Fig. 8.

In order that the machine may be ready for fresh additions, the bail 22 and the bars 18 and rack 43 must again take up their original positions as shown in Fig. 1; in other words the bail 22 must, after each operation of the lever or operating handle spring backwards through a step towards the left.

This operation is effected by means of the L-shaped slot 52 (Figs. 3 and 8) at the end of the connecting rod 26, in which a pin on the arm 27 engages. When the hand lever 28 after it has been pressed down by the handle is brought back by the pull of the spring 35, at which time, as already stated, the bail 22 pushes back the bars 18, and shortly before the said bail 22 reaches its lowermost position the connecting rod 26 strikes the fixed projection 53, whilst the pin on the lever 27 swings further over, which causes it to be brought out of the vertical into the horizontal opening (Fig. 3), the result being that the bail 22 springs back together with the bars 18 into the normal position owing to the pull of the spring 20 and ultimately the arm 27 and at the same time the hand lever 28 comes against the fixed projection 53.

The counter is at this time disengaged and the toothed racks 43 and bars 18 have come into a position for a fresh operation. The incline 44, over which the bail 22 passes, has for its object more easily to overcome the resistance of the springs 45. These springs have all to be stressed if the projections 47 are not turned out of the way, which requires a considerable expenditure of power.

The differential bars 18 are provided at their left hand end with teeth, on the underside, with which they engage a toothed wheel 54, which wheel is in fixed connection with another toothed wheel 55, with which meshes a type bar 56. The consequence is that a type bar 56 participates in the movement of the differential bar 18, and, as the distance between the printing type corresponds to the distance between the keys, the type bar is brought through the depression of the key into a position corresponding to the value on the key set.

It has been mentioned in passing that the locking bars 11, in the locking position, when released by the locking hooks 13 take up a different position from that which they occupy in the rest position. This difference of position is utilized for the purpose of causing zeros located on the left not to be printed. Each of the locking bars 11 is provided at its left hand end with an extension 57 (Fig. 1) against which a bent out portion of a bell crank lever 59 pivoted upon an axle 58 contacts. The longer arm of this bell crank lever, when no key is depressed, is in the lower position, as shown in Fig. 1, but when the key is set it is raised into the upper position as shown in Fig. 2. Pivotally connected to the longer arm of the bell crank lever 59 is a slidable pushing link 60, which engages by means of a forked portion over the type bar and is guided thereby. At the upper end it carries an anvil 61 which, when no key is set is not struck by the hammer 62, but which is struck thereby when a key is set.

When the type bars have been brought into position, the hammers 62 are released and cause those bars to print, the anvils 61 of which are within the reach of the forwardly projecting portions 63 of the hammers, see the dotted position in Fig. 2. In order at the same time to print zeros coming on the right, when the number has been set towards the left, the push links 60 are provided with lateral projections 63ᵃ (see Figs. 5 to 7), which constitute in a well known manner a so-called operative bridge, the result being that when a push link 60 located towards the left moves upwards, those located towards the right move therewith. The step 64 on a hammer, when the corresponding anvil has not been brought into the operative position, strikes against the guide struts 65, as shown dotted in Fig. 1, so that no printing is caused.

For the purpose of printing the total set on the figure drums the following means are provided.

By rocking over the lever 66 (Figs. 3, 10, 12, 14) the pin 66ᵃ carried at the lower end thereof comes against the bend in the bar 37 (Fig. 10) and pushes it downwards, so that

BEST AVAILABLE COPY



it no longer comes against the pin 34. The pin 66ᵃ therefore comes against the projection 67 on the bolt 38 and as it moves further throws in the counter, the bolt 38 taking with its projection 42 over the pin 40, see Fig. 14. The smaller projection 68 facing the projection 67 secures the lever 66 against displacement. The same projection 68, in the position of the parts shown in Fig. 12 prevents the operation of the lever 66, when the addition is being effected and the counter has been thrown in by the rod 37. As soon as the lever 66 comes into its locked position, shown at Fig. 14, the lower sloping portion 69 of the rod 37 has come into the neighbourhood of the pin 70 attached to the bolt 38. The differential bars 18 of course follow the bail 22 towards the left, when the hand lever 28 is operated, and, as the counter is now thrown in, move the counting wheels in the reverse direction to the counting one, until a pin 71, Figs. 1, 2, and 4 carried by their periphery comes against a pivoted catch 72, in which position zero is shown in the window. The catch 72 only exerts a locking action when the counting wheels are turning in the opposite direction for counting. When the rotation is in the counting direction, that is when addition is being carried out, it swings out of the way of the pin and is not brought into action. On the return stroke the bar 37 moves towards the right under the influence of the bail 22, Fig. 2, just as in the case of addition, but now as it is in the inoperative position, it does not actuate the pin 34, but presses with the inclined portion 69 (Fig. 14) the pin 70 of the bolt 38 downwards, and releases it, whereupon the counter is again released by means of the spring 41. The differential bars 18 which have moved towards the left through a distance corresponding to the value in the counter return when the counter is thrown out and leave therein the zero position. By rocking over the lever 66 the clearing device 16 is operated. As the bar 37 and the bolt 38 are provided on both sides of the machine, the axle 32 carries at the opposite side to the lever 66, a lever 66ᵇ with a pin 74, the operation of which is in all respects similar to that of the pin 66ᵃ, see Figs. 9, 11, 13 and 15. These figures show the right hand side wall of the machine, whilst the Figs. 10, 12 and 14 show the left hand side.

For printing subtotals, the lever 75 is moved in the direction of the arrow, Fig. 15, so that the lower end thereof comes (Figs. 9 and 15) against the pin 34 of the counter. On rocking over the lever 75, the counter is thrown in and locked by means of the bolt 38ᵃ, the hook 76 comes over the pin 77 and at the same time the extension at the extreme end of the bolt comes over the fixed pin 40. In this way the lever and the counter are locked against displacement, shown at Fig. 15. On operating the hand lever 28, as previously described in the case of printing a total, the transfer bars 18 follow the bail 22 until the pin 71 on the counter wheel comes against the catch 72. The type bars now represent the subtotal in the counter, which is printed. At the commencement of the return movement of the bail 22, as in the case of addition, it strikes the bar 37, which however has no influence on the counter, because it has already been thrown in. It is only when the bail comes to the inclined opening 44 and into its lowermost position that by striking the bolts 38, 38ᵃ, the counter is disconnected, and this counter as it has been thrown in during the backward and forward movements of the toothed racks 43 and the bars 18, has again taken up the subtotal. Moreover by operating the lever 75, the clearing lever 16 has been caused to swing over by means of the bar 73.

What I claim and desire to secure by Letters Patent in the United States of America is:—

1. An adding machine with printing device, characterized by a variable connection between the driving crank (27) and the operating member (26), a stationary lug (53) disconnecting one connection and closing the other one and at the same time serving as a stop for the crank.

2. An adding and printing machine of the type described wherein the same locking means which holds the counter in position for addition prevents the operation of the lever which is used when totals are being printed, and in which the same locking member holds the totals lever in the fixed position.

3. In an adding and printing machine of the type in which the figure keys constitute stops cooperating with elements, each of which is only provided with a single stop, a gathering member 22 arranged for the members 18 provided in the plane of the key rows, which member 22 is guided in a guide way having chamfered portions 44 at its end for the purpose of overcoming multiplied resistances of the members 43 with little effort.

4. In an adding and printing machine of the type in which the figure keys constitute stops cooperating with elements, each of which is only provided with a single stop, gathering member 22 for the members 18 that are arranged in the plane of the key rows, before the beginning of the gathering actuates push rods 37, which latter when adding positively adjust the adding mechanism, and when summing up, liberate said adding mechanism by their effect upon the members 38, and disconnect these members 38 from the gathering member 22, when arriving at its lowermost position, in order

BEST AVAILABLE COPY



thereby to bring the levers 66, 75 in active position.

5. In an adding and printing machine of the type in which the figure keys constitute stops cooperating with elements, each of which is only provided with a single stop, a connection between the drive crank 27 and the member 26 in such manner that after a full crank movement a stationary head 53 disconnects one engagement and effects another at another point, whereby the stationary head 53 serves at the same time as support for the drive crank 27.

In testimony whereof I affix my signature.

ARTHUR KADDATZ.