PATENT SPECIFICATION

Inventor: LOUIS MILES NATION-TELLERY

713,484

Date of Application and filing Complete Specification: Feb. 19, 1952.

No. 4415/52.

Complete Specification Published: Aug. 11, 1954.

Index at acceptance:—**Class 106(1)**, B1(A1: J: M: P2: X: Y1).

COMPLETE SPECIFICATION

Improvements in or relating to Calculating and/or Accounting Machines

multiple of the numer[illegible]
sents has been divided by a prime number in excess of nine or a multiple of a prime number in excess of nine and the other set of keys being operable to reveal on the numeral wheel of any particular order thereof both the number of the key of that order which has been depressed and the difference between the numeral which the key represents and the said prime number in excess of nine or said multiple of a prime number in excess of nine or the next higher multiple thereof for the purpose hereinafter specified.

The invention will be more particularly described with reference to the accompanying drawings in which:—

Figure 1 illustrates in perspective the exterior of a calculating machine of the key controlled multi-bank type embodying the present invention,

Figure 2 illustrates a section on the line [illegible] in the direction of

[illegible] 1 being operable to reveal on [illegible] el of any particular order both the number of the key of that order which is depressed and the residue after the numeral which that key represents has been multiplied by 960 and then divided by thirteen whilst the second set of keys to the left of the line B—B of Figure 1 is operable to reveal on the numeral wheel of any particular order thereof both the number of the key of that order which is depressed and the difference between the numeral which the key represents and thirteen or the next higher multiple thereof.

Thus if the numeral wheels of the machine illustrated in Figures 1 and 2 are designated in the manner indicated in Figure 4 then it will be observed from Figure 4 that the numeral wheel of the third column of keys from the

ERRATA

SPECIFICATION No. 713,484

Page 5, line 118, *for* "keys" *read* "key"
Page 6, line 120, *for* "sets" *read* "set"
Page 6, line 129, *after* "5" *insert* ","

THE PATENT OFFICE,
8th October, 1954.

PATENT SPECIFICATION

Inventor: LOUIS MILES NATION-TELLERY

713,484

Date of Application and filing Complete Specification: Feb. 19, 1952.

No. 4415/52.

Complete Specification Published: Aug. 11, 1954.

Index at acceptance:—**Class 106(1),** B1(A1: J: M: P2: X: Y1).

COMPLETE SPECIFICATION

Improvements in or relating to Calculating and/or Accounting Machines

We, BELL PUNCH COMPANY LIMITED, a British Company, of 39, St. James's Street, London, S.W.1, do hereby declare the invention, for which we pray that a patent may be granted to us, and the method by which it is to be performed, to be particularly described in and by the following statement:—

This invention is for improvements in or relating to calculating or accounting machines of the key controlled multi-bank type, and has for its object the provision of a machine wherein calculations may be rapidly checked in a simple manner.

According to the present invention there is provided a calculating or accounting machine of the key controlled multi-bank type wherein the banks of keys comprise two distinct sets, the one set being operable to reveal on the numeral wheel of any particular order both the number of the key of that order which has been depressed and the residue after the numeral which that key represents or a specific multiple of the numeral that that key represents has been divided by a prime number in excess of nine or a multiple of a prime number in excess of nine and the other set of keys being operable to reveal on the numeral wheel of any particular order thereof both the number of the key of that order which has been depressed and the difference between the numeral which the key represents and the said prime number in excess of nine or said multiple of a prime number in excess of nine or the next higher multiple thereof for the purpose hereinafter specified.

The invention will be more particularly described with reference to the accompanying drawings in which:—

Figure 1 illustrates in perspective the exterior of a calculating machine of the key controlled multi-bank type embodying the present invention,

Figure 2 illustrates a section on the line A—A of Figure 1 looking in the direction of the arrows and showing one order of the calculating machine illustrated in Figure 1.

Figure 3 in conjunction with Figures 1 and 2 illustrates the mechanism for disconnecting the transfer mechanism between the orders of keys disposed to the right and to the left of the line A—A of Figure 1 and one means of maintaining the set of keys disposed on the right-hand side of the line A—A isolated from the set of keys located on the left-hand side thereof, and

Figures 4, 5 and 6 illustrate on an enlarged scale developments of the faces of the numeral wheels of the various orders of three different kinds of currency machines constructed in accordance with the present invention.

Referring to the drawings there is illustrated in Figures 1 and 2 a calculating machine of the key controlled multi-bank type wherein the banks of keys illustrated in Figure 1 comprise two distinct sets—the one set disposed on the right-hand side of the line B—B of Figure 1 being operable to reveal on the numeral wheel of any particular order both the number of the key of that order which is depressed and the residue after the numeral which that key represents has been multiplied by 960 and then divided by thirteen whilst the second set of keys to the left of the line B—B of Figure 1 is operable to reveal on the numeral wheel of any particular order thereof both the number of the key of that order which is depressed and the difference between the numeral which the key represents and thirteen or the next higher multiple thereof.

Thus if the numeral wheels of the machine illustrated in Figures 1 and 2 are designated in the manner indicated in Figure 4 then it will be observed from Figure 4 that the numeral wheel of the third column of keys from the

right-hand side of the machine illustrated in Figure 1 will have designated thereon the figure set out in the third column from the right-hand side of the development of the numeral wheels illustrated in Figure 4. Thus it will be seen that the figures which occur on the said numeral wheel will be as follows:—

0_0 1_8 2_3 3_{11} 4_6 5_1 6_9 7_4 8_{12} 9_7

The secondary figures of 0, 8, 3, 11, 6, 1, 9, 4, 12 and 7 hereinafter referred to as the "residue figures" are obtained by multiplying each of the primary figures 0, 1, 2, 3, 4, 5, 6, 7, 8 and 9 hereinafter referred to as "the number of the key" by the order of the keys in which the keys are located, thus for example in the case of the third order of keys the number of the key is multiplied by one hundred, so as to obtain "the numeral which that key represents" and the numeral which the key represents is multiplied by 960 and thereafter divided by thirteen. Thus if the first key of the third order is depressed there is displayed in the window 22^a of the third order the number of the key, namely 1, and the residue figure 8 which is obtained by multiplying the number of the key, namely 1, by 100 so as to obtain "the numeral which the key represents" namely one hundred and then multiplying the numeral so obtained by 960 and dividing the result by 13. If this process is continued for the remaining numbers of the order it will be found that the residue figures shown in the third column of Figure 4 will be obtained. The residue figures for the eight orders disposed to the right-hand side of the Figure 4 are obtained by following the procedure outlined above.

Consequently, it will be observed that in referring to "the number of the key" reference is made solely to the primary number allotted to a particular key in an order whereas "the numeral which that key represents" comprises the primary number allotted to the key when multiplied by the value of the particular order of keys. Thus for example all the keys of the first order comprise units, the second order tens, the third order hundreds and so on until the eighth order where the numbers on the keys represent tens of millions. In the five remaining orders of keys disposed upon the left-hand side of the line B—B the secondary figure arranged adjacent to the number of the key comprises the difference between the numeral which the key represents and the code figure 13 or the difference between the numeral which the key represents and the next highest multiple of 13. Thus in the ninth column of keys it will be observed that the figure by the side of number 1 is 12, beside the number 2 is 11 whereas in the tenth row the figure beside the number 1 which may be regarded in effect as 10, is 3 and the figure beside 2 which may be regarded as 20, is 6.

Referring to Figures 1, 2 and 3 of the drawings the calculating machine comprises an outer case 20 having the keys 20^a arranged at its upper side. The front of the case is inclined towards the forward end thereof and is provided with an elongated recess 20^b having a facia strip 22 provided with windows 22^1 through which the numbers on the numeral wheels 21 can be viewed. Each order of keys contains 9 keys numbered 1 to 9 and each order of keys is associated with a system of linkages directly operable by any of the keys in the order to rotate the numeral wheel 21 associated with that order.

In the order of keys illustrated in Figure 2 each key comprises a stem 23 arranged to slide in a slot in a cover plate 24, the stem being provided with the usual key top 25 and with a shoulder 26 for engaging a key bar 27 extending longitudinally of the order below all the keys therein. The lower portion of each key stem 23 is guided in a slot in a plate 28 secured to or formed integrally with a frame plate which serves to separate the order from the next adjacent order. Each key is also provided with a hole 30 situated immediately above the shoulder 26 and is shaped at its lower end to the form of a fork. Also each key stem is associated with a spring 32 for the purpose of restoring the key to its normal position after depression, the upward movement of the key being limited by the abutment of a second shoulder 33 on the key stem against a part of the under side of the top plate 24. When the keys are in their rest positions the lower ends of the keys in the same order are at the same horizontal level as shown in Figure 2.

The key bar 27 is arranged for movement in a vertical plane and is mounted in such a manner that during its vertical downward movement it also moves longitudinally through a small distance in a rearward direction. In the example shown the key bar 27 is pivotally connected at its rear end at 34 to one arm of a bell crank lever 35 rotatably mounted on a fixed spindle 36 extending transversely through all the lines in the machine. The key bar 27 is supported at the forward end thereof by a T-shaped member 37 pivotally mounted on a fixed spindle 38 extending parallel to the spindle 36 transversely through the machine. One arm of the T-shaped member 37 is pivotally connected as shown to the key bar 27 through the intermediary of a short link 39. The key bar 27 is formed with a series of hook-shaped projections 40, one for each key, each hook 40 being shaped to form an upper abutment surface 41 and below this surface a protuberance 42. The mounting of the key bar 27 is such that on depression of a key the key bar 27 moves rearwardly through a short distance to cause the appropriate protuberance 42 to move into the hole 30 in the stem of the depressed key.

Below the key bar 27 and extending parallel thereto is a stop bar 43 pivotally connected at

the rear end thereof by means of a pin 44 to the lower arm of the bell crank lever 35 and at the forward end thereof at 45 to one arm of the T-shaped member 37. The arrangement is therefore such that when the key bar 27 is depressed on actuation of a key the stop bar 43 moves forwardly in a direction towards the numeral wheel 21. The keys are so arranged that during the latter part of their downward movement the forked lower ends 31 thereof straddle the stop bar 43. Also the stop bar 43 is formed in its upper side with a series of notches 46 terminating in vertical abutment surfaces 47 arranged to contact with a depressed key stem to limit the downward movement of the key and movement of the key bar 27 and the stop bar 43. The stop bar 43 is formed at its lower side and near the rearward end thereof with a tooth 48 engageable by a pawl 49 being pivotally mounted at its rear end on a pin 50 carried in the upper ends of the arms of a U-piece 51 rotatably mounted on a spindle 52 extending transversely through the machine. The U-piece 51 is also formed with a tail 53 the rear end of which is arranged to abut against the upper side of a bar 54 extending behind all the lines in the machine. The bar 54 is provided with bent ends 55 rotatably mounted on the spindle 52, the bar 54 being subjected to the action of a spring tending to swing the bar in an upward direction. The pawl 49 is also associated with a spring normally tending to hold the forward end of the pawl against the under side of the stop bar 43.

Pivotally mounted on a spindle 58 extending completely through the machine is a bell crank lever 59 having the end 60 of one arm shaped as shown, the end 61 of its other arm being bent at right angles to the said arm. The bell crank lever 59 is associated with a spring tending to rotate it in a counter-clockwise direction. Normally the bell crank lever 59 is located in the position illustrated with the end 60 abutting against the front side of the bar 54. Also extending completely through the machine at the rear of each order is a releasing bar 63 pivotally mounted by means of its inturned ends 64 on the spindle 52, one end 64 having a vertical extension 64*a* connected by a link 64*b* to a handle 65, Figure 1 projecting through a slot in the casing 20 of the machine. Upon actuation of the handle 65 the bar 63 is swung in a counter-clockwise direction to move the same into engagement with the lower arm of the bell crank lever 59.

It will be appreciated that the bell crank lever 59 and the pawl 49 and its associated parts above described are reproduced in each line in the same way as are the key bar 27, stop bar 43 and their associated parts.

The numeral wheel 21 is rotated on actuation of a key by a rack 67 having 10 teeth adapted to engage and rotate a 10-tooth pinion 68 connected to the numeral wheel 21. The rack 67 is formed at the front end of an arm 69 rotatably mounted at the rear end thereof on a pin 70 carried in the lower ends of the arms of an inverted U-piece 71 pivotally mounted near its upper end on a spindle 72 extending completely through the machine. The arm 69 is connected at the forward end thereof to the T-shaped member 37 through a series of links 73, 74 and 75. The end of the link 73 is pivotally connected to the arm 69 at 76 whilst the other end is pivotally connected to the link 74 which is pivotally mounted in a spindle 76[1], extending transversely through the machine. The link 75 is pivotally connected to both the link 74 and an arm of the T-shaped member 37, the arrangement being such that rotation of the T-shaped member in a clockwise direction around the spindle 38 serves to swing the part 74 in a counterclockwise direction around its spindle 76 to cause the link 73 to swing the arm 69 in an upward direction. In the position of rest shown in Figure 2, the location of the U-part 71 is such that the rack 67 is held away from the teeth of the pinion 68 and can be swung through an angle into an upward position without influencing the pinion.

Extending longitudinally of the order below all the keys therein is a bar 78 mounted so as to be rocked about a longitudinal axis. The bar 78 is provided with a number of laterally projecting lugs 79 one of which is arranged directly below each key stem so as to be engageable by the latter during the downward movement thereof. As illustrated in Figure 2 the bar 78 is not arranged parallel to the key bar 27 and the stop bar 43 but is inclined thereto the distance between the lower end of the stem of key No. 1 and the lug 79 situated below that key being a minimum and the corresponding distance for key No. 9 being a maximum. When a key is depressed the distance moved by the key bar 27 and the stop bar 43 and hence the angle through which the rack 67 is swung upwardly before the lower end of the key stem engages its corresponding lug 79 will thus vary with each key. The bar 78 is associated with a spring tending to rock the bar in a direction to move the lugs 79 in an upward direction. Also the bar is formed near its rear end with a lug 81 arranged below the key stem of key 9 so as to overlie the pawl 49 and to engage and depress the same when a key has been fully depressed.

One arm of the inverted U-part 71 is formed with a right-angular shaped slot 82 as clearly shown into which projects a part 83 secured to or formed integrally with the bar 78. The U-part 71 is also formed with a tail piece 84 to the end of which is secured one end of a spring 85, the other end of which is secured to a hook piece 86 carried on the pin 45 which serves to connect the lower arm of the T-shaped member 37 to the stop bar 43. The anchorages of the spring 85 are arranged as shown in the drawing with respect to the pivot points 38 and 72.

The operation of the mechanism is as follows:—Normally the parts occupy the position shown in Figure 2 with the projection 83 lying in the vertical arm of the slot 82 the rack 67 being held in its lowermost position and away from the pinion 68. The forward end of the pawl 49 is in engagement with the under side of the stop bar 43 and the end of the tail 53 is resting on the upper side of the bar 54 with the end 60 of the bell crank lever 59 abutting against the front side of the bar 54.

When a key, for example the 9 key, is depressed its shoulder 26 engages the key bar 27 and moves the latter downwardly and in consequence the stop bar 43 longitudinally in a forward direction. The rearward movement of the key bar 27 causes the protuberance 42 on the hook 40 corresponding to the 9 key to extend into the hole 30 in the stem of the said key. Just before the lower end of the stem of the operated key engages with the corresponding lug 81 on the bar 78 the rack has been swung in an upward direction out of engagement with the pinion 68 and the spring 85 has been extended by reason of the forward movement of the hook 86. The tail 84 and U-part 71 are retained in their initial positions by the engagement of the part 83 in the vertical arm of the slot 82. Also the end of the pawl 49 abuts against the under side of the stop bar 43, the tooth 48 on the stop bar having passed over the free end of the pawl 49 during forward movement of the bar.

At the completion of the downward stroke of the operated key the lower end of the stem thereof engages the corresponding lug 81 and rocks the bar 78 so as to move the part 83 downwardly out of the upper end of the vertical arm of the slot 82. The U-part 71 is thereupon released and swung in a clockwise direction by the spring 85 acting through the tail 84 to move the rack 67 into engagement with the pinion 68. The depth of engagement of the teeth of the rack with those of the pinion is limited by abutment of the rear end of the slot 82 against the part 83. The rocking of the bar 78 by the stem of the depressed key also causes the lug 81 to engage the pawl 49 and move the same out of engagement with the stop bar 43, the engagement of the pawl by the projection 81 serving merely to rotate the pawl 49 about its pivot 50 without influencing the locking mechanism.

When the key is released the spring 85 causes the T-member 37 to pivot in a counter-clockwise direction so as to swing the rack 67 in a counter-clockwise direction and thereby rotate the numeral wheel a distance proportionate to the number of the key depressed. After the rack reaches the bottom of its stroke, a pin 87 carried by the stop bar 43, which latter has been moving in a rearward direction during the return stroke of the rack, engages the end of a slot in a link 88 pivotted at 70 and restores the U-part 71 to its initial position. The return of the U-part 71 serves to withdraw the rack 67 from the pinion 68 and a spring serves to rock the bar 78 to reposition the part 83 in the upper end of the vertical arm of the slot 82. Restoration of the U-part 71 is effected as a result of the engagement of the slotted link 88 by a pin 87 on the stop bar 43 and is achieved by the arrangement shown in the drawings and the anchorages of the front and rear ends of the spring 85 in a manner known *per se*. Resetting of the bar 78 also permits the pawl 49 to spring upwardly into engagement with the under side of the stop bar 46, the end of the pawl engaging such under side at a position in front of the tooth 48.

As previously explained and as will be apparent from the foregoing the angle through which the rack 67 is swung before it is moved into engagement with the pinion, and therefore the angle through which the numeral wheel is rotated during the return stroke of the rack, will vary according to the key depressed. In effect each key serves to move the rack through a predetermined distance before moving it into engagement with the pinion and the parts are so arranged that actuation of the first key rotates the numeral wheel through an angle of 36°, the second key 72°, and so on up to the ninth key which rotates the numeral wheel through an angle of 324°.

Also the arrangement is such that the angular velocity of the numeral wheel is reduced to zero or substantially to zero by suitable deceleration of the rack before the latter disengages the pinion. This has the effect of preventing over-throw of the wheel, the latter in the present instance being brought to rest in its correct position before it is freed by the rack. The rack is decelerated towards the end of its stroke by the arrangement and disposition of the links 73, 74 and 75.

If the operator fails inadvertently to depress a key to its fullest extent the key stem does not engage its corresponding lug 79 on the bar 78 and the rack 67 is therefore not released into engagement with the pinion. The bar 78 does not therefore cause the pawl 49 to be moved away from the stop bar 43 and hence when the key is released and the stop bar 43 starts to move rearwardly the pawl 49 is engaged by the tooth 48 and is moved bodily in a rearward direction to swing the part 51 in a clockwise direction around its pivot 52 the tail 53 depressing the bar 54 against the influence of its spring into contact with a stop edge 90 and the parts coming to rest with the stop bar 43 held against further rearward movement and away from its normal position of rest. As the key bar 27, has failed to return to its initial position the key which has been depressed is unable to restore fully owing to the engagement of the appropriate protuberance 42 in the hole 30 in the key stem.

As will be readily appreciated if an attempt is now made to depress another key in the order

containing the incompletely depressed key the shoulder 26 of the said other key will engage the upper side of its corresponding protuberance 42 and will move the driving bar 27 downwardly an extremely small amount, the abutment surface 41 above the said protuberance 42 engaging the key stem of the other key after a very small downward movement of the key bar 27 by reason of the rearward movement of the bar. Such abutment of the surface 41 against the key stem will therefore serve to prevent downward movement of the said other key so that the said other key is locked. Hence therefore after a key has been incompletely depressed and released the remaining keys in the order containing that key are locked against depression.

Also movement of the bar 54 downwardly will permit the bell crank lever 59 to be swung in a counter-clockwise direction by its spring, such movement of the bell crank lever 59 serving to move the bent end 61 thereof into a position behind the pin 44 at the rear end of the stop bar 43. Such movement of the bell crank lever 59 is limited by the abutment of its lower arm against the release bar 63.

Downward movement of the bar 54 also serves to release the bell crank levers 59 in all the remaining lines of the machine and each of these bell crank levers swings into a position wherein its bent end 61 lies in front of the pin 44 on the corresponding stop bar 43 so as to hold the stop bar against forward movement. Hence all the keys in the remaining orders of the machine are locked against depression. Thus failure of the operator to depress a key to its fullest extent results in the locking up against further movement of the entire keyboard with the exception of that particular key which has been incorrectly actuated. Further the top of the mal-operated key in question is held at a position below that which it normally occupies so that the key is capable of immediate visual identification.

After the false stroke the key can then be depressed to its full extent and released, this serving to register the correct figure on the numeral wheel. Full depression of the key will now cause the bar 78 to be actuated to release the rack 67 into engagement with the pinion 68 and also to move the pawl 49 out of engagement with the under side of the stop bar 43. When the key is released subsequent to the full depression the rack 67 is swung in a downward direction to rotate the numeral wheel and the stop bar 43 moves rearwardly until it is arrested by engagement of its pin 44 against the bent end 61 of the bell crank lever 59. Such arrest of the stop bar 43 occurs immediately before the pin 87 is due to engage the end of the slot in link 88 and therefore when the stop bar is arrested the rack 67 is still in engagement with the pinion 68 although it has completed rotation of the same. Hence any other attempt to depress the key will tend to rotate the pinion in a direction opposite to that in which it is rotated during the normal operative stroke of the rack and as this pinion is associated with the usual non-return pawl no further downward movement of the key is permitted and therefore the entire keyboard is now locked. However, as the stop bar 43 in the line containing the incompletely depressed key is not fully restored to its normal position the said key will again be retained on its release in a position below its normal position by reason of the engagement of the appropriate protuberance 42 in the hole 30 in its key stem.

It will be apparent that the false stroke has had no influence on the calculation since the rack was not moved into engagement with the pinion on release of the key subsequent to the false stroke; hence the subsequent correct depression of the key on which the false stroke was made will bring the calculation to exactly the same condition as if the false stroke had never occurred.

The keys of the machine are unlocked after correction of the error and calculation permitted to proceed by depressing the error key 64*c*, whereby engagement of the lower end of the key stem with the inclined surface of extension 64*a* causes the bar 63 to rotate all the bell crank levers 59 in a clockwise direction. Such movement of the levers 59 will now permit the bar 54 to rise under the influence of its spring and, furthermore, the stop bar 43 associated with the mal-operated key, and which has been held in a displaced position, is now permitted to return to its initial position and in turn permit restoration of the mal-operated key.

It should be noted that the unlocking of any keys as described above also occurs when the zeroising handle 65 is operated through the medium of link 64*b*, but, by reason of the slot in this link the error key does not cause the figure wheels to zeroise as does the handle 65, and the calculation can therefore proceed after correction of the error without the necessity of starting the calculation afresh.

The foregoing describes the effect produced by the incomplete depression of a single key, this key being the only one of the keyboard which is actuated. If, however, a plurality of keys is actuated simultaneously, one of which does not receive a full depression, all the keys which were actuated, including not only the keys on which the false stroke was made but also the remaining keys which were fully depressed, are prevented on their release from fully restoring to their initial positions. This result is achieved by reason of the fact the faulty key stroke serves, as previously described, to move the bar 54 downwardly to release the bell crank levers 59 in all the lines in the machine which bell crank levers 59 thereupon swing in a counter-clockwise direction and as this swinging movement is completed before the full restoration of the stop bars 43 in the lines containing the correctly

depressed keys, the pins 44 on each of said stop bars are obstructed by the corresponding bent ends 61 of the bell crank levers 59 to prevent full restoration of the driving bars. The latter are held in a position wherein their respective racks 67 have rotated the pinions 68 through the correct amounts but have not become disengaged therefrom so that the keys in the orders of keys containing the correctly depressed keys become locked since any attempt to depress these keys will tend to rotate the pinions 68 in a counter-clockwise direction which will be prevented by the non-return pawls afore-mentioned. As however the stop bars 43 in the orders of keys containing the correctly depressed keys have not completely restored to initial position each of the said keys is also prevented from being fully restored and the entire combination of keys becomes immediately apparent from a visual inspection of the keyboard. It will be apparent that the keys in the orders of keys in which a key was not depressed are also held locked by reason of the location of the bent ends 61 in front of the pins 44 so that in effect all the keys of the machine are locked with the exception of the mal-operated key.

If now the error key 64*c* is actuated the bell crank levers 59 are swung in a clockwise direction and in all those orders of keys in which the keys were properly depressed the stop bars 43 are permitted to return to their initial positions thus allowing the keys in those orders of keys to rise into their normal positions. However, the stop bar 43 in the order of keys containing the mal-operated key will not be permitted to restore to its initial position because of its engagement with the pawl 49 and hence actuation of the error key 64*c* will not affect the position of the mal-operated key. Hence when a plurality of keys is simultaneously or substantially simultaneously depressed and released and one of these keys receives an incomplete depression all the said keys will fail to restore completely and if subsequently the error key 64*c* is actuated the keys which did receive a complete depression will restore to their initial positions whilst that key which was mal-operated will remain in a depressed condition.

After the error has been corrected by depression of the key which was incorrectly actuated the calculation may be proceeded with as hereinbefore described after a further actuation of the error key 64*c* without the necessity of zeroising the machine.

In addition to the mechanism hereinbefore described there is provided between each pair of adjacent orders of keys a transfer mechanism which when the numeral wheel of the lower order has been rotated through one complete revolution moves the numeral wheel of the higher order through a distance corresponding to one unit. Such mechanism may take any desired form and many of such mechanisms are well known in the art. Means are also provided whereby the transfer mechanism between any two adjacent orders of keys may be thrown out of action by the depression of a transfer release buttton 100.

One method in which, when a button 100 between any two adjacent orders of keys is depressed, the operation of the transfer mechanism between the two adjacent orders of keys is rendered ineffective, is illustrated in Figures 2 and 3. The inner end of the button 100 (Figure 2) is arranged to engage with a plate 101 which is adapted to engage with a transfer wheel 102 and displace the same to the left (Figure 3) in the longitudinal direction of the axis of a spindle 103 into the dotted line position and so out of the path of a pin 104 of a wheel 105 mounted on a spindle 106 of the nearest lower order of keys.

The button 100 which is disposed between the sixth and eighth button of the machine illustrated in Figure 1 is provided with a circumferential slot 107 into which when the button has been depressed a slidable catch 108 can be moved so as to hold the seventh button in a depressed condition and thereby isolate the first seven orders of keys from the last five orders thus ensuring that the machine is provided with two distinct and in no way interconnected sets of keys, one disposed to the right-hand side of the line B—B and the other disposed to the left-hand side of the said line so as in effect to divide the machine into two substantially separate calculating units, having two sets of the numeral wheels. The numeral wheels of one set are provided with two sets of distinctive figures, one comprising "the number of the key" and the other "the residue figure" whilst the numeral wheels of the other set have two sets of figures, one comprising "the number of the key" and the other the difference between the numeral which the key represents and the prime number or the next higher multiple of the said prime number chosen as the check figure.

With a machine of the character hereinbefore described it will be observed that calculations may be checked in a very simple manner, and for the purpose of illustration there will now be described how calculations in addition, subtraction, multiplication and division may be checked by the arrangement hereinbefore specified.

Firstly, let it be supposed that it is desired to add 438 to 564. In the first instance the keys 4, 3 and 8 of the sets of keys disposed to the right-hand side of the line B—B of Figure 2 are depressed with the result that there will be shown through the first three windows 22 in addition to the numbers 4, 3, 8 the residue figures 6, 5, 10 which when added together give a total of 21 which comprises 13 plus 8. If now the machine is zeroised in the normal manner by means of the handle 65 and the keys 5 6, 4 of the first three orders are depressed there will be shown through the first three

windows 22ᵃ in addition to the numbers 5, 6, 4 the residue figures 1, 10, 5 which when added together make 16 which comprises 13 and 3. Therefore, the residue figure for 438 may be regarded as 8 and the residue figure for 564 as 3. If now keys 438 and 564 of the first three orders of keys are again depressed there will be displayed in the first four windows 22ᵃ the numbers 1, 0, 0, 2 and in addition the residue figures which will be 2, 0, 0, 9 which if added together give a residue figure for 1,002 of 11. If now the residue figures of 8 and 3 of the numbers 438 and 564 respectively are introduced in the second set of keys, commencing with the fifth order of keys from the left-hand side of the machine there will be shown in the first two windows to the left of the line B—B a total of 11 and the residue figures 3 and 12. If now the residue figures of the two sets of keys are added together they will comprise 3, 12 and 11 giving a total of 26 which is an exact multiple of 13, thus proving that the total of 1,002 for the sums 438 and 564 is correct.

For the purpose of subtracting two figures from one another the residue figures of the minuend and the subtrahend are obtained separately in the manner indicated above. The subtraction is then effected upon the machine in the normal manner in which a subtraction is effected upon any calculating machine of the specified type and the residue figure obtained by the subtraction should be the same as the figure obtained by the subtraction of the subtrahend residue figure from the residue figure of the minuend. Should the subtrahend residue figure constitute a larger figure than the residue figure of the minuend it is only necessary mentally to add 13 to the residue figure of the minuend before the subtraction of the residue figures is effected.

Thus, if it is desired to subtract 36 from 345 it will be found that if the keys 3, 4 and 5 of the first three orders of keys disposed on the right-hand side of the line B—B are depressed there will be displayed in the first three windows 22ᵃ in addition to the numbers 3, 4 and 5 the residue figures 11, 11, 3 making a total of 25 which is equivalent to 13 plus 12. If now the machine is zeroised and the subtrahend 36 is inserted into the machine there will be displayed in the first two windows in addition to the numbers 3 and 6 the residue figures 5 and 1 making a total of 6. The difference between the two residue figures 12 and 6 is 6. If the subtraction is now effected in the normal way on the calculating machine it will be found that there will be displayed in the first three windows 3, 0 and 9 and the residue figures of 11, 0 and 8 giving a total of 19. If now the code figure 13 is subtracted from the residue figure 19 a remainder of 6 is obtained, thus proving that the total of 309 displayed in the windows 22ᵃ is correct.

For the purpose of multiplication it will be assumed that it is required to multiply 732 by 246. The first operation is to depress the keys 7, 3 and 2 of the first three orders of the set of keys on the right-hand side of the machine, as a result of which there will appear in the first three windows 22ᵃ the numbers 7, 3 and 2 and in addition the residue figures 4, 5 and 9 which, when added together, give a total of 18. If 13 is subtracted from 18 a residue figure of 5 is obtained for the number 732.

The machine is thereupon zeroised and the keys 2, 4 and 6 of the first three orders of the set of keys on the right-hand side of the machine are depressed, whereupon there will appear in the first three windows 22ᵃ the numbers 2, 4 and 6 and the residue figures 3, 11 and 1 which, when added together, gives a total of 15. If 13 is subtracted from this number it will give a residue figure of 2 for the number 246.

If the machine is once again zeroised and thereupon the number 732 is multiplied by 246 in the usual manner employed upon calculating machines of the type specified there will be displayed in the first six windows 22ᵃ on the right-hand side of the machine the numbers 180,072 with the residue figures of 5, 4, 0, 0, 3 and 9 which, when added together, give a total of 21. If 13 is subtracted from 21 there remains the residue figure of 8 for the number 180,072.

The machine is thereupon zeroised and the key 8 of the first column of the right-hand side of the machine is depressed displaying the number 8 in the first window 22ᵃ with the residue figure of 10. If now the two residue figures of 2 and 5 for the numbers 732 and 246 are multiplied together the result is 10. If this is entered upon the first two columns in the second set of keys to the left-hand side of the line B—B of Figure 1 there will be displayed in the first two windows of the second set of keys the numbers 1 and 0 with the residue figures of 3 and 0. If now the residue figures of the two sets of keys are added together, namely, 3, 0 and 10, it will produce a total of 13 proving that the result of 180,072 is correct.

For the purpose of dividing two figures one into the other, it will be assumed that it is desired to divide 12,420 by 345. The first operation is to depress the keys 1, 2, 4, 2 and 0 of the first five orders of the set of keys disposed upon the right-hand side of the line B—B. As a result it will be found that there will be displayed in the first five windows 22ᵃ the primary numbers 1, 2, 4, 2 and 0, and the residue figures 7, 4, 6, 12 and 0. If the residue figures are added together a sum of 29 is obtained which is the equivalent of twice 13 plus 3 thus indicating that the residue figure for 12,420 is 3. A note should be made of this figure.

The machine is now zeroised and the keys 3, 4 and 5 of the first three orders of the set of keys disposed upon the right-hand side of

the line B—B are depressed. As a result there will be displayed in the first three windows 22[a] the numbers 3, 4 and 5 and the residue figures of 11, 11 and 3. If the residue figures are added together a sum of 25 is obtained which is the equivalent of 13 plus 12, thus indicating that the residue figure for 345 is 12. A note should be made of this figure also.

The machine is once again zeroised and the division of 345 into 12,420 is effected upon the machine in the normal manner when it will be found that a quotient of 36 is obtained. The machine is zeroised and the keys 3 and 6 on the set of keys disposed on the right-hand side of the line B—B are depressed when it will be found that the residue figures for 36 are 5 and 1, thus giving a residue figure of 6 for the quotient 36. The residue figure 6 for the quotient 36 is now multiplied by the residue figure 12 of the divisor upon the keys disposed to the left-hand side of the line B—B of Figure 1 and at the same time the third key of the first order of the set of keys disposed upon the right-hand side of the line B—B is depressed. This key represents the residue figure 3 for the dividend 12,420. The result will be that upon the numeral wheels disposed to the left-hand side of the line B—B there will occur the primary numbers 7 and 2, the product of 12 and 6 and on the right-hand side the primary number 3 whilst the residue figures for 7, 2 and 3 will read 8, 11 and 7 which when added together give 26 which is an exact multiple of 13, thus proving that the division calculation performed is correct.

Referring to Figures 5 and 6 of the drawings, there are illustrated in development in Figure 5 the numeral wheels for a calculating machine arranged to calculate in pounds, shillings and pence whereas in Figure 6 there are set out in development the numeral wheels of a calculating machine employing pounds, shillings, pence and farthings. The method of operating such a machine is exactly the same as that employed in the currency arrangement in Figure 4 herein more particularly specified.

It will be appreciated from the developments of the numeral wheels set out in Figure 4 that the machine can be employed equally well for decimals as for whole numbers, there being provided adjacent to the windows 22[a] of the various orders of keys, means for indicating where the decimal point commences.

In the models hereinbefore described and illustrated the numeral which the key represents has been multiplied by 960 and divided by 13 in order to obtain the residue figure for that key. It will be appreciated that the figure 960 has been taken because there are 960 farthings in the pound and 13 has been adopted as a code check figure because it is the smallest prime number producing the best commercially practical results by detecting calculation errors which may be due to the transposition of any two figures in a six-digit group within the decimal order but it will be appreciated that if it is desired to work in any other units, for example, inches, feet and yards, or pounds, quarters, hundredweights and tons, the figure by which the numeral which the key represents has to be multiplied will depend upon the unit of the quantity which is being dealt with.

Further, although the calculating machine hereinbefore described relates to a specific form of key controlled multi-bank calculating machine, nevertheless the invention is applicable to other calculating or accounting machines of the same type, for example to calculating machines in which the rack is constantly in mesh with the pinion of the numeral wheel. Again, although means are provided upon the machine for definitely isolating one set of keys from the other, it will be appreciated that provided the calculations to be dealt with do not exceed what is capable of being employed within the first set of keys and there is no possibility of a carry over from one set of keys to the other, it is not essential in order that a machine should operate in accordance with the present invention that the two sets of keys should be isolated one from the other.

It will be readily appreciated that with the machine hereinbefore set forth, besides the arithmetical result being checked, the machine can by the allocation of code numbers to each particular customer check not only the accuracy of the totals of an account but also as to whether the items have been correctly debited to the correct customer.

What we claim is:—

1. A calculating or accounting machine of the key controlled multi-bank type wherein the banks of keys comprise two distinct sets, the one set being operable to reveal on the numeral wheel of any particular order both the number of the key of that order which is depressed and the residue after the numeral which that key represents or a specific multiple of the numeral that that key represents has been divided by a prime number in excess of nine or a multiple of a prime number in excess of nine and the other set of keys being operable to reveal on the numeral wheel of any particular order thereof both the number of the key of that order which has been depressed and the difference between the numeral which the key represents and the said prime number in excess of nine or said multiple of a prime number in excess of nine or the next higher multiple thereof for the purpose specified.

2. A calculating or accounting machine as claimed in Claim 1, wherein the prime number is thirteen.

3. A calculating or accounting machine as claimed in Claim 1 or Claim 2, wherein the residue figure comprises what remains after the numeral which the key represents has been multiplied by nine hundred and sixty and divided by the prime number.

4. A calculating or accounting machine as

claimed in any one of the preceding claims, wherein means are provided to ensure that the numeral wheels of one set of keys are isolated from the numeral wheels of the other set of keys.

5. A calculating or accounting machine as claimed in Claim 4, wherein means are provided for rendering ineffective any transfer mechanism arranged between the numeral wheels of the two sets of keys.

6. A calculating or accounting machine as claimed in Claim 5, wherein a button mounted upon the exterior casing of the machine is arranged to be depressed to render the said transfer mechanism ineffective.

7. A calculating or accounting machine as claimed in Claim 6, wherein means are provided for holding the said button in a depressed condition.

8. A calculating or accounting machine constructed, arranged and adapted to operate substantially as hereinbefore described with reference to the accompanying drawings.

G. F. REDFERN & CO.,
Redfern House,
Dominion Street, London, E.C.2.

Leamington Spa: Printed for Her Majesty's Stationery Office, by the Courier Press.—1954.
Published at The Patent Office, 25, Southampton Buildings, London, W.C.2, from which copies may be obtained.

FIG. 1.

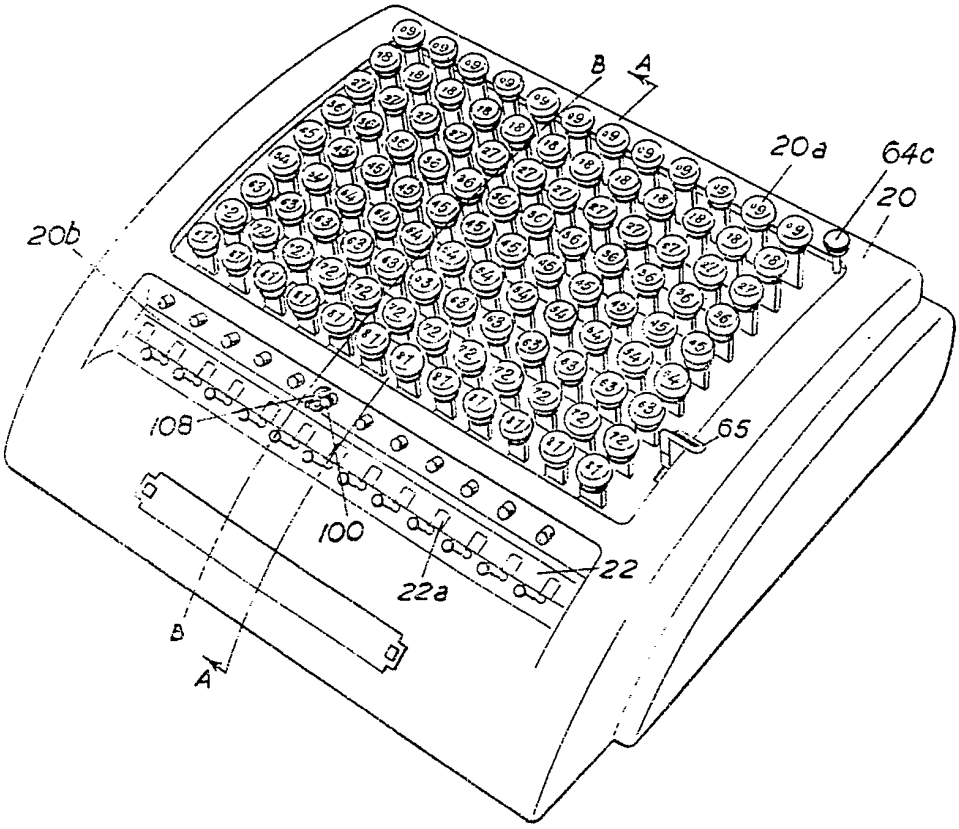

713,484 COMPLETE SPECIFICATION

3 SHEETS

This drawing is a reproduction of the Original on a reduced scale.

SHEETS 1 & 3

FIG. 3.

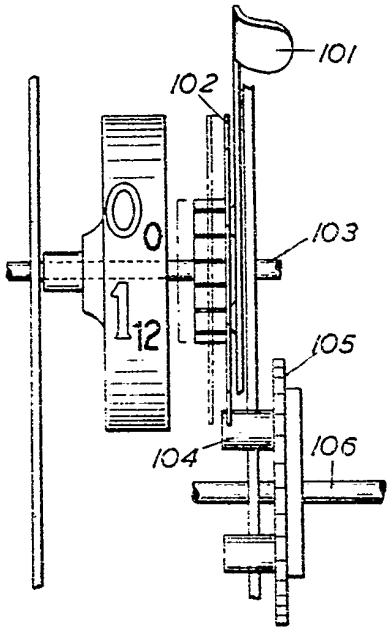

54c

20

FIG. 6.

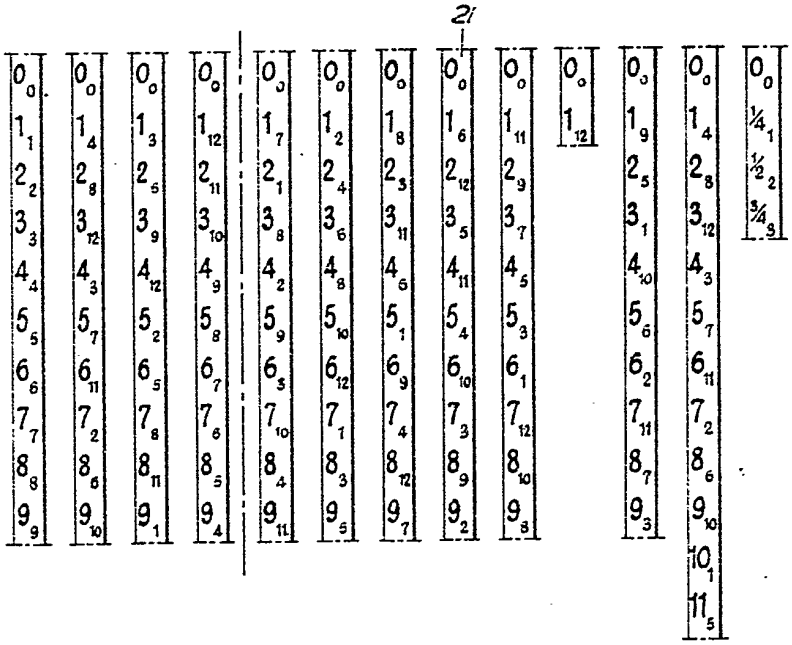

713,484 COMPLETE SPECIFICATION
3 SHEETS

This drawing is a reproduction of the Original on a reduced scale.

SHEETS 1 & 3

FIG. 1.

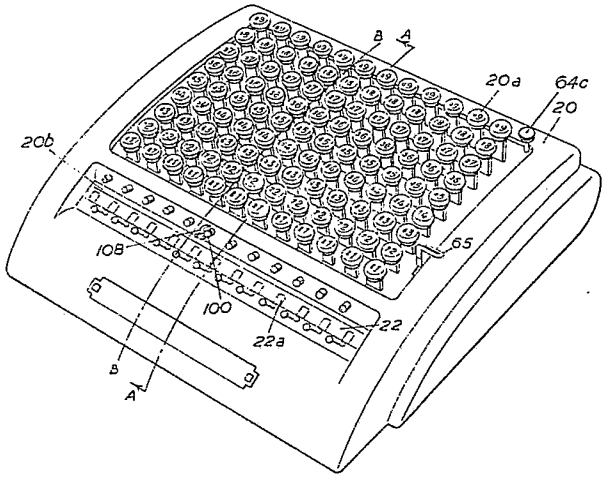

FIG. 3.

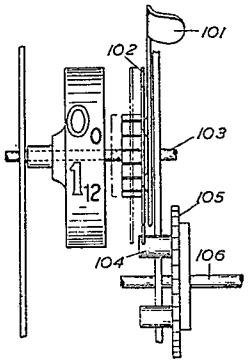

FIG. 6.

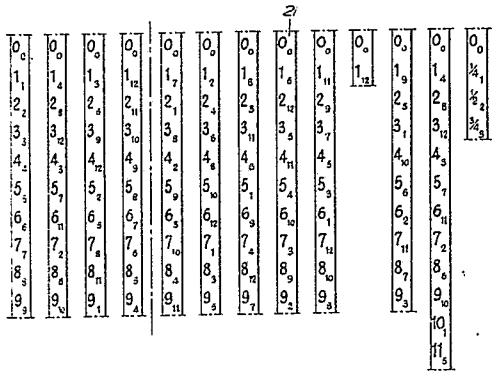

FIG. 2.

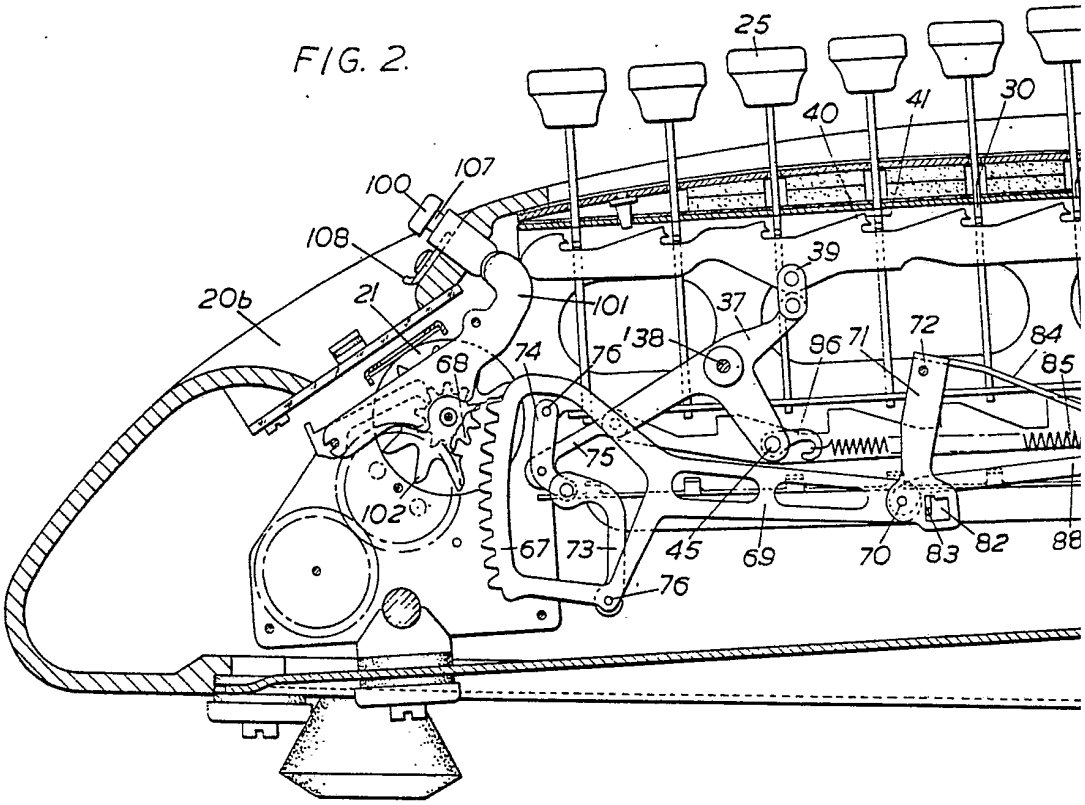
25
40
41
30
100
107
108
39
20b
21
101
37
138
96
71
72
84
85
68
74
76
75
102
67
73
45
69
70
83
82
88
76

FIG. 4.

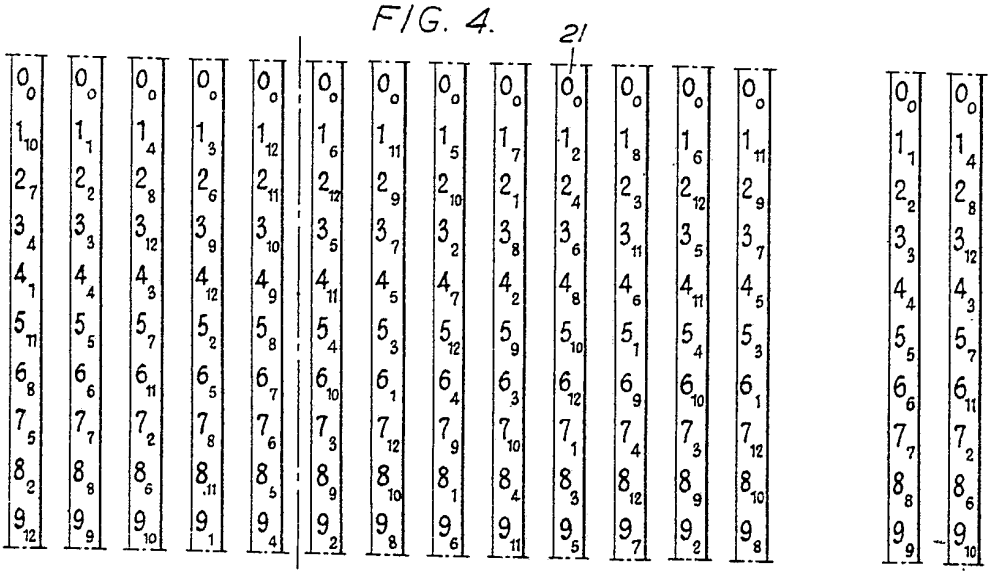
21

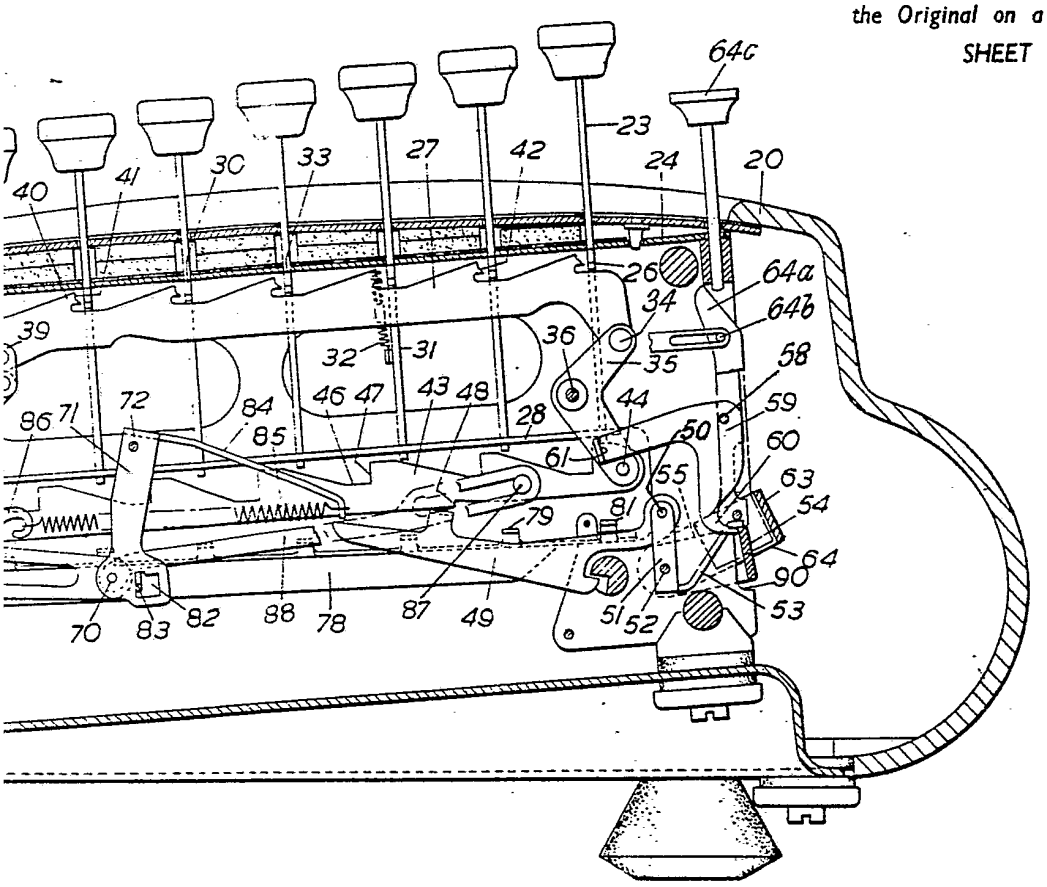
64c
23
20
24
42
27
33
30
41
40
26
64a
34
64b
39
36
35
58
32
31
59
46 47
43 48
44
86 71
72
84
85
28
50
60
61
55
63
54
81
79
64
90
53
70
83
82
88
78
87
49
51
52

FIG. 5.

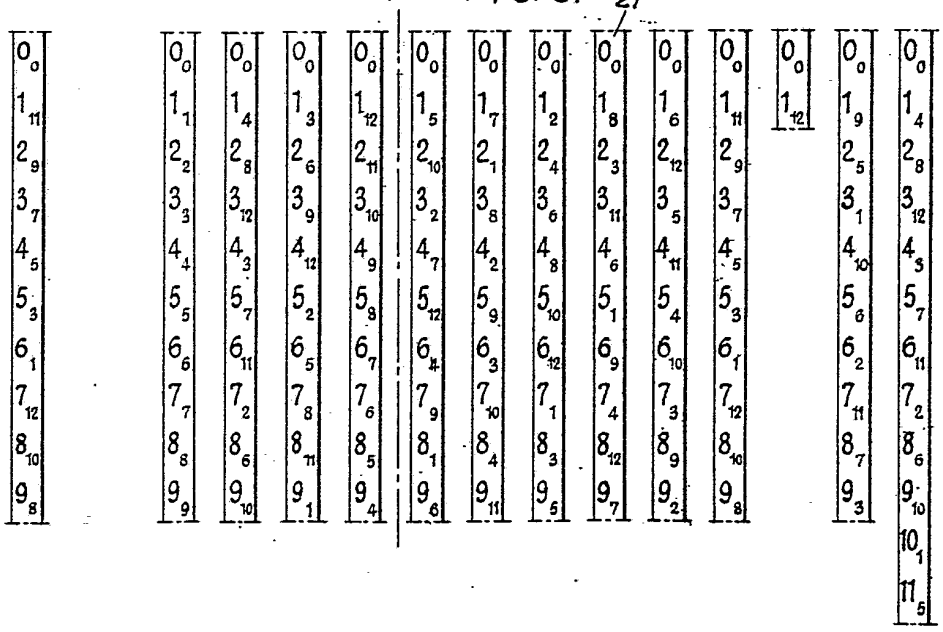
21

FIG. 2.

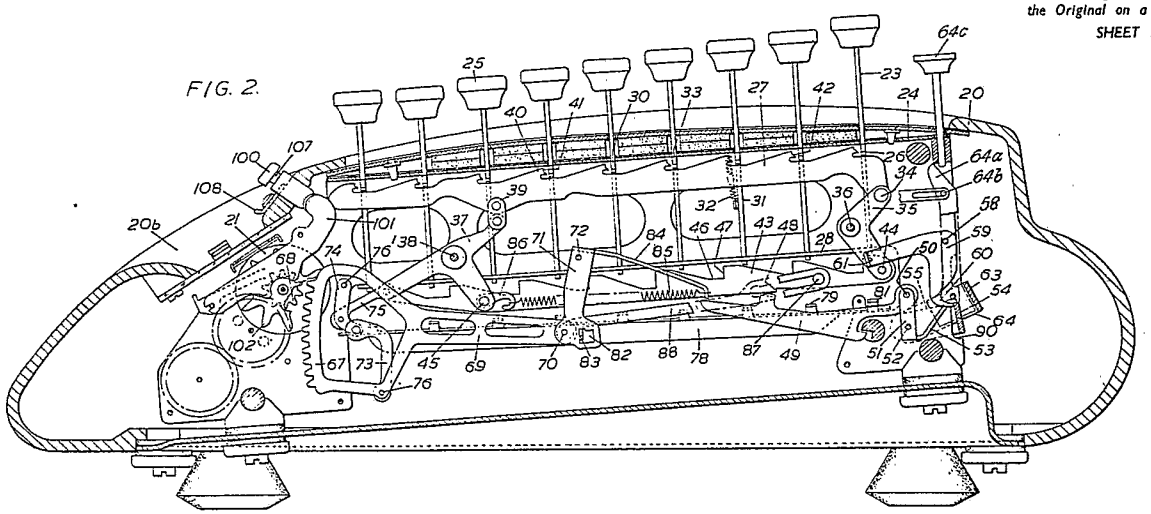

FIG. 4.

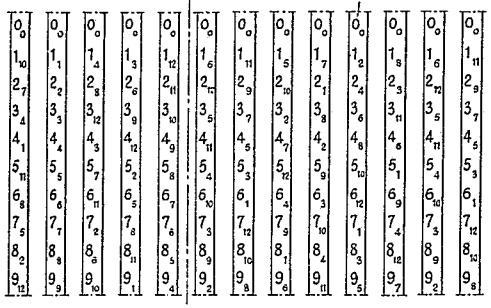
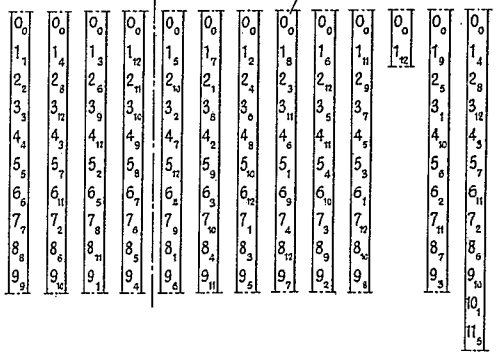
FIG. 5.